24V/12W Off-Line DCM Flyback Converter Optimized for Zero-Power at No-Load

(ACTIVE) PMP10927

Description & Features | Technical Documents | Support & Community | Order Now

View the Important Notice for TI Designs covering authorized use, intellectual property matters and disclaimers.

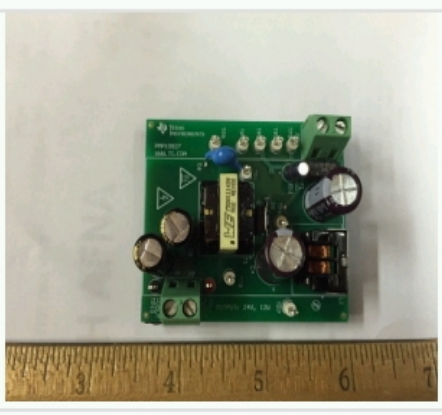

24V/12W Off-Line DCM Flyback Converter Optimized for Zero-Power at No-Load

Description

This design features the UCC28730 flyback controller in conjunction with the UCC24650 Wake-Up monitor to provide CV, CC regulated output with ultra-low stand-by power that exceeds Level VI and CoC Tier 2 specifications for average efficiency and 10% load efficiency. Wake-up signal detection provides fast transient response to large load steps.

As seen at APEC

Features

- No-Load Stand-By Power Consumption less than 5 mW ("Zero-Power")
- Wake-Up Detection for Fast Dynamic Response
- Primary Side Regulation Eliminates Opto-Coupler
- Average Efficiency and 10% efficiency exceeds Level VI and CoC Tier 2 specifications, effective 2016
- Resonant Ring Valley Switching Operation for Highest Overall Efficiency
- This circuit design includes tested data for efficiency and transient response along with key waveforms.

Fully assembled board (shown above) developed for testing and performance validation only, not available for sale.

TI's Standard Terms and Conditions for Evaluation Modules apply.

Schematic/Block Diagram

Quickly understand overall system functionality.

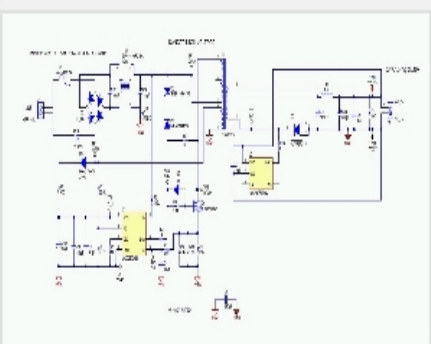

Download Schematic

Test Data

Get results faster with test and simulation data that's been verified.

Download Test Data

Design Files

Download ready-to-use system files to speed your design process. Get Viewer.

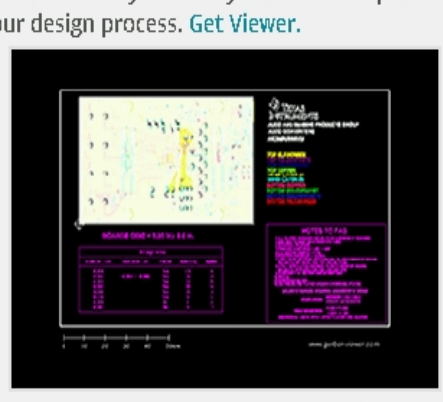

Download Design Files

Bill of Materials (BOM)

Find the complete list of components in this reference design.

Download BOM

TI Devices (2)

Order samples, get tools and find more information on the TI products in this reference design.

Part Number	Name	Product Family	Sample & Buy	Design Kits & Evaluation Modules
UCC24650	200-V Wake-up Monitor for Fast Transient Primary-side Regulation	Power Management	Sample & Buy	View Design Kits & Evaluation Modules
UCC28730	Zero Standby PSR Flyback Controller with CVCC and Wake-Up Monitoring	AC/DC and Isolated DC/DC Power Supply	Sample & Buy	View Design Kits & Evaluation Modules

CAD/CAE symbols

Part #	Package | Pins	CAD File (.bxl)	STEP Model (.stp)
UCC24650	SOT (DBV) | 5	Download	Download
UCC28730	SOIC (D) | 7	Download	-

Texas Instruments and Accelerated Designs Inc. have collaborated together to provide TI customers with schematic symbols and PCB layout footprints for TI products.

Step 1: Download and install the Ultra Librarian software ZIP: 62MB

Step 2: Download the Symbol and Footprint .bxl file.

- read more -

Technical Documents

User guides (1)

Title	Abstract	Type	Size (KB)	Date	Views
PMP10927 Test Results		PDF	1011	25 Feb 2015	0

Design files (5)

Title	Abstract	Type	Size (KB)	Date	Views
PMP10927 Gerber		ZIP	200	25 Feb 2015	0
PMP10927 PCB		PDF	284	25 Feb 2015	0
PMP10927 Assembly Drawing		PDF	146	25 Feb 2015	0
PMP10927 BOM		PDF	50	25 Feb 2015	0
PMP10927 Schematic		PDF	29	25 Feb 2015	0

Support & Community

TI E2E™ community

TI E2E™ Community

As a member of my.TI you can join the TI E2E™ Community where you can ask questions, share ideas and collaborate with fellow engineers and TI experts

Contents are provided "AS IS" by the respective TI and Community contributors and do not constitute TI specifications. See Terms of use.

Engage in the Community

- Amplifiers
- Broadband RF/IF & Digital Radio
- Clocks & Timers
- Data Converters
- DLP® & MEMS
- Interface
- Logic
- Power Management
- Wireless Connectivity

Wikis

Visit the TI Wiki

Other Support

- TI E2E Community
- Contact Technical Support

Your History

Products You Recently Viewed

- PMP7188
- PMP9512
- TIDA-00412
- PMP10691
- PMP9648

TI is a global semiconductor design and manufacturing company. Innovate with 100,000+ analog ICs and embedded processors, along with software, tools and the industry's largest sales/support staff.

© Copyright 1995-2015 Texas Instruments Incorporated. All rights reserved.
Trademarks | Privacy policy | Terms of use | Terms of sale