Ten Output QR Flyback and Buck Converter Reference Design

(ACTIVE) PMP10822.5

Description & Features | Technical Documents | Support & Community | Order Now

View the Important Notice for TI Designs covering authorized use, intellectual property matters and disclaimers.

Key Document

- PMP10822 Test Results (PDF 2148 KB)
  16 Jul 2015 5 views

» View All Technical Documents (5)

PMP10822.5 Ten Output QR Flyback and Buck Converter Reference Design Top of Board

Description

The PMP10822 reference design utilizes two QR flyback, and four buck converters. The efficiency for the 12V and 24V flyback approaches 87%, while the 16V buck converter has efficiency greater than 89%.

Fully assembled board (shown above) developed for testing and performance validation only, not available for sale.

Features

- The 12V and 24V flyback converter's efficiency approaches 87% at full load, with an input of 120VAC
- The 16V buck converter's efficiency is greater than 89% at full load, with a 24V input
- Board length is approximately 3.45" x 4.95"
- Test report is available

TI's Standard Terms and Conditions for Evaluation Modules apply.

Schematic/Block Diagram

Quickly understand overall system functionality.

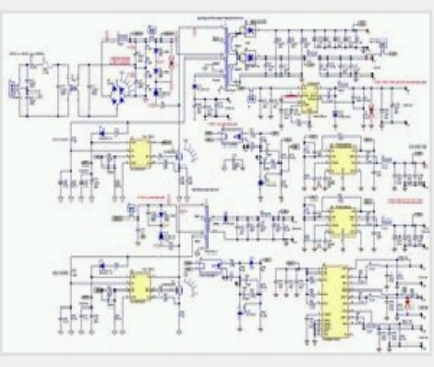

Download Schematic

Design Guide

Get results faster with test and simulation data that's been verified.

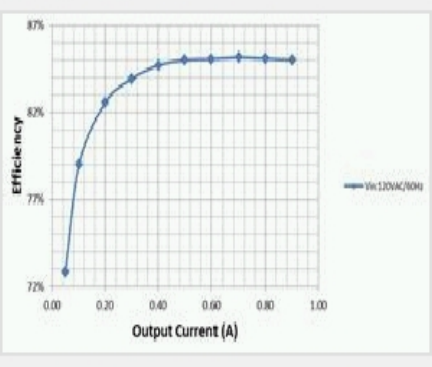

Download Design Guide

Design Files

Download ready-to-use system files to speed your design process. Get Viewer.

Download Design Files

Bill of Materials (BOM)

Find the complete list of components in this reference design.

Download BOM

Parametrics

	PMP10822.5
Vin (Min) (V)	10
Vin (Max) (V)	14
Vout (Nom) (V)	5.7
Iout (Max) (A)	.3
Output Power	1.71
Isolated/Non-Isolated	Non-Isolated
Input Type	DC
Topology	Buck- Synchronous

TI Devices (5)

Order samples, get tools and find more information on the TI products in this reference design.

Part Number	Name	Product Family	Sample & Buy	Design Kits & Evaluation Modules
ATL431	2.5V Low Iq Adjustable Precision Shunt Regulator	Voltage Reference	Sample & Buy	View Design Kits & Evaluation Modules
TPS5402	3.5V to 28V Input, 1.7A Output, Non-Synchronous Step-Down Regulator with Integrated MOSFET	Converter (Integrated Switch)	Sample & Buy	View Design Kits & Evaluation Modules
TPS54239	4.5V to 23V Input, 2A Synchronous Step-Down Converter with D-CAP2 Mode	Converter (Integrated Switch)	Sample & Buy	View Design Kits & Evaluation Modules
TPS65581	4.5 to 18V Input, 2.5A/1.5A/1.5A Triple Sync. Step-Down Converter w/ Advanced D-CAP2™ and Eco-mode™	Power Management	Sample & Buy	View Design Kits & Evaluation Modules
UCC28740	Constant-Voltage, Constant-Current Flyback Controller Using Opto-Coupler Feedback	AC/DC and Isolated DC/DC Power Supply	Sample & Buy	View Design Kits & Evaluation Modules

Show More

CAD/CAE symbols

Part #	Package | Pins	CAD File (.bxl)	STEP Model (.stp)
ATL431	SOT (DBZ) | 3	Download	Download
TPS5402	SOIC (D) | 8	Download	Download

Texas Instruments and Accelerated Designs Inc. have collaborated together to provide TI customers with schematic symbols and PCB layout footprints for TI products.

Step 1: Download and install the Ultra Librarian software ZIP: 62MB

Step 2: Download the Symbol and Footprint .bxl file.

- read more -

Technical Documents

User guides (1)

Title	Abstract	Type	Size (KB)	Date	Views	TI Recommends
PMP10822 Test Results		PDF	2148	16 Jul 2015	5	✓

Design files (4)

Title	Abstract	Type	Size (KB)	Date	Views
PMP10822 Gerber		ZIP	617	16 Jul 2015	2
PMP10822 Assembly Drawing		PDF	89	16 Jul 2015	6
PMP10822 BOM		PDF	174	16 Jul 2015	14
PMP10822 Schematic		PDF	244	16 Jul 2015	39

Support & Community

TI E2E™ community

TI E2E™ Community

As a member of my.TI you can join the TI E2E™ Community where you can ask questions, share ideas and collaborate with fellow engineers and TI experts

Contents are provided "AS IS" by the respective TI and Community contributors and do not constitute TI specifications. See Terms of use.

Engage in the Community

- Amplifiers
- Broadband RF/IF & Digital Radio
- Clocks & Timers
- Data Converters
- DLP® & MEMS
- Interface
- Logic
- Power Management
- Wireless Connectivity

Wikis

Visit the TI Wiki

Other Support

- TI E2E Community
- Contact Technical Support

Your History

Products You Recently Viewed

There are no items in your history.

TI is a global semiconductor design and manufacturing company. Innovate with 100,000+ analog ICs and embedded processors, along with software, tools and the industry's largest sales/support staff.

© Copyright 1995-2015 Texas Instruments Incorporated. All rights reserved.
Trademarks | Privacy policy | Terms of use | Terms of sale