Universal AC Input, 12Vout 1A Power Supply with Low Standby Power Reference Design

(ACTIVE) PMP4480

Description & Features | Technical Documents | Support & Community | Order Now

View the Important Notice for TI Designs covering authorized use, intellectual property matters and disclaimers.

Key Document

- PMP4480 Test Results (PDF 387 KB)
  09 Jul 2015 36 views

» View All Technical Documents (4)

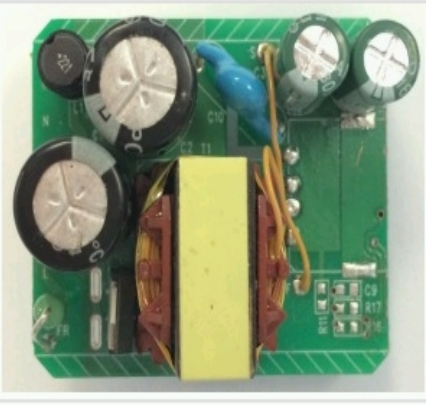

PMP4480 Universal AC Input, 12Vout 1A Power Supply with Low Standby Power Reference Design Board Image

Fully assembled board (shown above) developed for testing and performance validation only, not available for sale.

Description

The PMP4480 is a power reference design with a universal AC input and a DC isolated output of 12V at 1A. It implements a high efficiency primary side controller UCC28710. The system achieves high efficiency. The board measures with 37mmX31mmX15mm. The PMP4480 is fully tested and passes EMC (CE) requirements. The no load power is <30mW over range.

Features

- Isolated Flyback with Primary Side Control
- Low standby power design (<30mW @ 5V10mA)
- High efficiency, up to 86% at 230Vin full load
- Output OCP, OVP and Short Circuit Protection
- Meet EMC and safety certification

TI's Standard Terms and Conditions for Evaluation Modules apply.

Schematic/Block Diagram

Quickly understand overall system functionality.

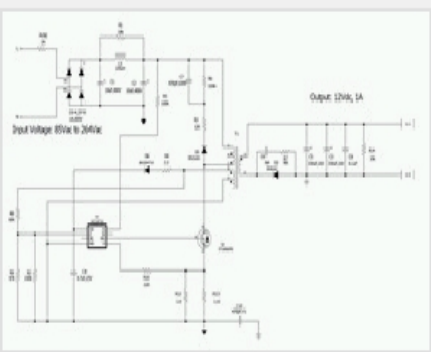

Download Schematic

Design Guide

Get results faster with test and simulation data that's been verified.

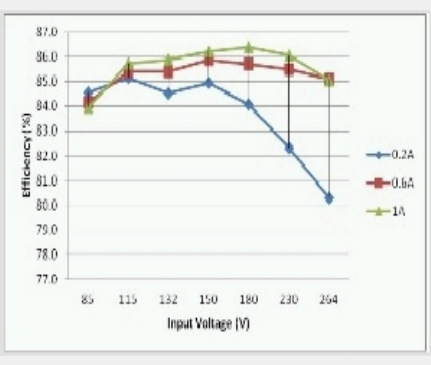

Download Design Guide

Design Files

Download ready-to-use system files to speed your design process. Get Viewer.

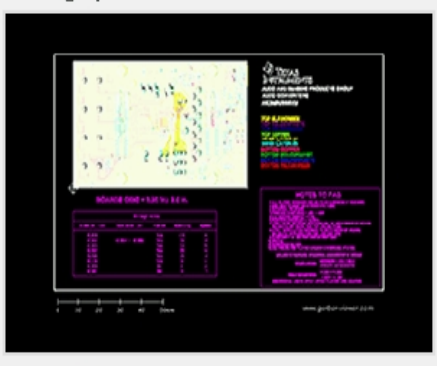

Download Design Files

Bill of Materials (BOM)

Find the complete list of components in this reference design.

Download BOM

Parametrics

	PMP4480
Vin (Min) (V)	85
Vin (Max) (V)	264
Vout (Nom) (V)	12
Iout (Max) (A)	1
Output Power	12
Isolated/Non-Isolated	Isolated
Input Type	AC
Topology	Flyback- Quasi Resonant

TI Devices (1)

Order samples, get tools and find more information on the TI products in this reference design.

Part Number	Name	Product Family	Sample & Buy	Design Kits & Evaluation Modules
UCC28710	Constant-Voltage, Constant-Current PWM Controller with Primary-Side Regulation	AC/DC and Isolated DC/DC Power Supply	Sample & Buy	View Design Kits & Evaluation Modules

Technical Documents

User guides (1)

Title	Abstract	Type	Size (KB)	Date	Views	TI Recommends
PMP4480 Test Results		PDF	387	09 Jul 2015	36	✓

Design files (3)

Title	Abstract	Type	Size (KB)	Date	Views
PMP4480 CAD Files		ZIP	135	09 Jul 2015	25
PMP4480 BOM		PDF	52	09 Jul 2015	31
PMP4480 Schematic		PDF	26	09 Jul 2015	77

Applications

- Refrigerators & Freezers

Support & Community

TI E2E™ community

TI E2E™ Community

As a member of my.TI you can join the TI E2E™ Community where you can ask questions, share ideas and collaborate with fellow engineers and TI experts

Contents are provided "AS IS" by the respective TI and Community contributors and do not constitute TI specifications. See Terms of use.

Engage in the Community

- Amplifiers
- Broadband RF/IF & Digital Radio
- Clocks & Timers
- Data Converters
- DLP® & MEMS
- Interface
- Logic
- Power Management
- Wireless Connectivity

Wikis

Visit the TI Wiki

Other Support

- TI E2E Community
- Contact Technical Support

Your History

Products You Recently Viewed

There are no items in your history.

TI is a global semiconductor design and manufacturing company. Innovate with 100,000+ analog ICs and embedded processors, along with software, tools and the industry's largest sales/support staff.

© Copyright 1995-2015 Texas Instruments Incorporated. All rights reserved.
Trademarks | Privacy policy | Terms of use | Terms of sale