Synchronous Rectifier Controller Daughter Board Reference Design

(ACTIVE) PMP11216

Description & Features | Technical Documents | Support & Community | Order Now

View the Important Notice for TI Designs covering authorized use, intellectual property matters and disclaimers.

Key Document

- PMP11216 Test Results [PDF 633 KB]
  19 Jun 2015 108 views

View All Technical Documents [6]

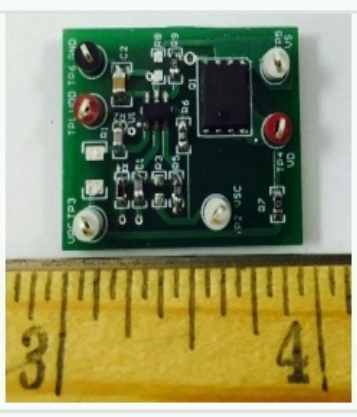

PMP11216 Synchronous Rectifier Controller Daughter Board Reference Design Top of Board

Fully assembled board (shown above) developed for testing and performance validation only, not available for sale.

Description

The UCC24630 SR controller is a high performance controller and driver for N-channel MOSFET power devices used in secondary side synchronous rectification. Using a volt-second balance control method, the UCC24630 is ideal for flyback power supplies over a wide output voltage range since the IC is not directly connected to the MOSFET drain. The SR drive turn off threshold is not dependant on the MOSFET RDSON which allows optimizing for maximum conduction time.

Features

- Optimized for 5V to 24V Flyback Systems
- Wide VDD range from 3.6V to 28V
- Volt-Second Balance SR On Time Control
- Minimize Effect of MOSFET and Layout Inductance
- CCM Operation Compatibility
- Auto Low Power Detect and 110uA Standby Mode Current

TI's Standard Terms and Conditions for Evaluation Modules apply.

Schematic/Block Diagram

Quickly understand overall system functionality.

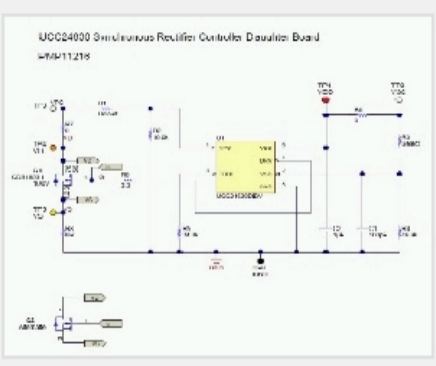

Download Schematic

Design Guide

Get results faster with test and simulation data that's been verified.

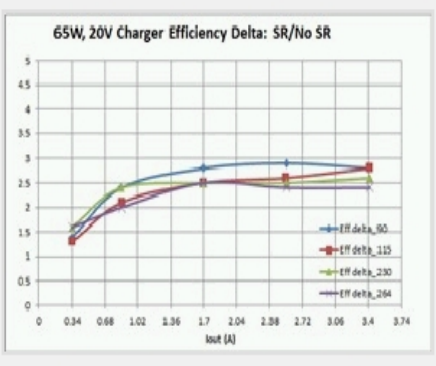

Download Design Guide

Design Files

Download ready-to-use system files to speed your design process. Get Viewer.

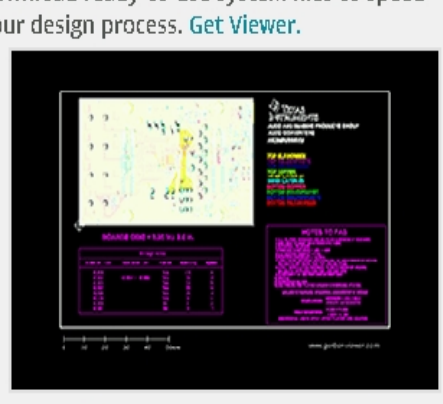

Download Design Files

Bill of Materials (BOM)

Find the complete list of components in this reference design.

Download BOM

Parametrics

	PMP11216
Vin (Min) [V]	90
Vin (Max) [V]	264
Vout (Nom) [V]	20
Iout (Max) [A]	3.4
Output Power	68
Isolated/Non-Isolated	Isolated
Input Type	AC
Topology	Flyback- DCM

TI Devices (2)

Order samples, get tools and find more information on the TI products in this reference design.

Part Number	Name	Product Family	Sample & Buy	Design Kits & Evaluation Modules
CSD19531Q5A	100V, 5.3mOhm, SON5x6 NexFET™ Power MOSFET	Power MOSFET	Sample & Buy	Not Available
UCC24630	UCC24630 Synchronous Rectifier Controller With Ultra Low Standby Current	AC/DC and Isolated DC/DC Power Supply	Sample & Buy	View Design Kits & Evaluation Modules

CAD/CAE symbols

Part #	Package | Pins	CAD File (.bxl)	STEP Model (.stp)
UCC24630	SOT (DBV) | 6	Download	Download

Texas Instruments and Accelerated Designs Inc. have collaborated together to provide TI customers with schematic symbols and PCB layout footprints for TI products.

Step 1: Download and install the Ultra Librarian software ZIP; 62MB

Step 2: Download the Symbol and Footprint .bxl file.

- read more -

Technical Documents

User guides (1)

Title	Abstract	Type	Size (KB)	Date	Views	TI Recommends
PMP11216 Test Results		PDF	633	19 Jun 2015	108	✓

Design files (5)

Title	Abstract	Type	Size (KB)	Date	Views
PMP11216 PCB		PDF	177	19 Jun 2015	34
PMP112216 Assembly Drawing		PDF	119	19 Jun 2015	25
PMP11216 BOM		PDF	46	19 Jun 2015	32
PMP11216 Gerber		ZIP	170	19 Jun 2015	19
PMP11216 Schematic		PDF	22	19 Jun 2015	159

Applications

- Power Supply: AC/DC, Isolated, no PFC, < 90W

Support & Community

TI E2E™ community

TI E2E™ Community

As a member of my.TI you can join the TI E2E™ Community where you can ask questions, share ideas and collaborate with fellow engineers and TI experts

Contents are provided "AS IS" by the respective TI and Community contributors and do not constitute TI specifications. See Terms of use.

Engage in the Community

- Amplifiers
- Broadband RF/IF & Digital Radio
- Clocks & Timers
- Data Converters
- DLP® & MEMS
- Interface
- Logic
- Power Management
- Wireless Connectivity

Wikis

Visit the TI Wiki

Other Support

- TI E2E Community
- Contact Technical Support

Your History

Products You Recently Viewed

- PMP9780.1
- PMP9780.3
- PMP9780.2
- PMP9780.0
- PMP9772

TI is a global semiconductor design and manufacturing company. Innovate with 100,000+ analog ICs and embedded processors, along with software, tools and the industry's largest sales/support staff.

© Copyright 1995-2015 Texas Instruments Incorporated. All rights reserved.
Trademarks | Privacy policy | Terms of use | Terms of sale