Reference Design - Low Noise ZETA Topology Converts 6V...22Vin to 11V@500mA

(ACTIVE) PMP10074

Description & Features | Technical Documents | Support & Community | Order Now

View the Important Notice for TI Designs covering authorized use, intellectual property matters and disclaimers.

Description

This small ZETA converter works with input voltages in the range of 6V to 32V. Thank to the ZETA topology, it is able to stabilize the output voltage to 11V, which is inside the input voltage range. A SEPIC converter might be also employed at the expense of higher output ripple voltage.

Features

- Very low output ripple voltage 0.14% peak-peak, 20MHz BWL
- It is possible to use a buck evaluation module and modify it into ZETA topology
- Design retains the advantage of the SEPIC converter and shows well clamped switch node

TI's Standard Terms and Conditions for Evaluation Modules apply.

Reference Design - Low Noise ZETA Topology Converts 6V...22Vin to 11V@500mA (top view)

Fully assembled board (shown above) developed for testing and performance validation only, not available for sale.

Schematic/Block Diagram

Quickly understand overall system functionality.

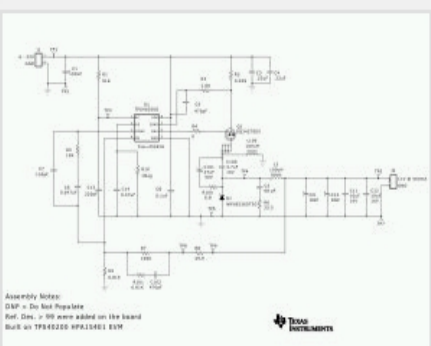

Download Schematic

Test Data

Get results faster with test and simulation data that's been verified.

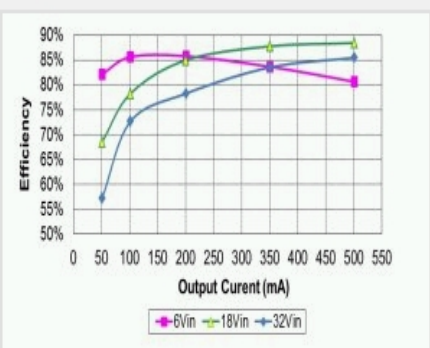

Download Test Data

Design Files

Download ready-to-use system files to speed your design process. Get Viewer.

Download Design Files

Bill of Materials (BOM)

Find the complete list of components in this reference design.

Download BOM

Parametrics

	PMP10074
Vin (Min) (V)	60
Vin (Max) (V)	32
Vout (Nom) (V)	11
Iout (Max) (A)	.5
Output Power	5.5
Isolated/Non-Isolated	Non-Isolated
Input Type	DC
Topology	Other

TI Devices (1)

Order samples, get tools and find more information on the TI products in this reference design.

Part Number	Name	Product Family	Sample & Buy	Design Kits & Evaluation Modules
TPS40200	Wide Input Non-Synchronous Buck DC/DC Controller	Controller (External Switch)	Sample & Buy	View Design Kits & Evaluation Modules

CAD/CAE symbols

Part #	Package | Pins	CAD File (.bxl)	STEP Model (.stp)
TPS40200	SOIC (D) | 8	Download	Download
	VSON (DRB) | 8	Download	Download

Texas Instruments and Accelerated Designs Inc. have collaborated together to provide TI customers with schematic symbols and PCB layout footprints for TI products.

Step 1: Download and install the Ultra Librarian software ZIP: 62MB

Step 2: Download the Symbol and Footprint .bxl file.

- read more -

Technical Documents

User guides (1)

Title	Abstract	Type	Size (KB)	Date	Views
PMP10074 Test Results		PDF	581	10 Apr 2015	75

Design files (5)

Title	Abstract	Type	Size (KB)	Date	Views
PMP10074 Gerber		ZIP	198	10 Apr 2015	25
PMP10074 CAD Files		ZIP	39	10 Apr 2015	63
PMP10074 Assembly Drawing		PDF	158	10 Apr 2015	36
PMP10074 BOM		PDF	45	10 Apr 2015	69
PMP10074 Schematic		PDF	50	10 Apr 2015	227

Support & Community

TI E2E™ community

TI E2E™ Community

As a member of my.TI you can join the TI E2E™ Community where you can ask questions, share ideas and collaborate with fellow engineers and TI experts

Contents are provided "AS IS" by the respective TI and Community contributors and do not constitute TI specifications. See Terms of use.

Engage in the Community

- Amplifiers
- Broadband RF/IF & Digital Radio
- Clocks & Timers
- Data Converters
- DLP® & MEMS
- Interface
- Logic
- Power Management
- Wireless Connectivity

Wikis

Visit the TI Wiki

Other Support

- TI E2E Community
- Contact Technical Support

Your History

Products You Recently Viewed

- PMP10856
- PMP9367
- PMP10613.1
- PMP10613.2
- PMP9402

TI is a global semiconductor design and manufacturing company. Innovate with 100,000+ analog ICs and embedded processors, along with software, tools and the industry's largest sales/support staff.

© Copyright 1995-2015 Texas Instruments Incorporated. All rights reserved.
Trademarks | Privacy policy | Terms of use | Terms of sale