Sepic with Adjustable Output Voltage and Input Current Limit Reference Design

(ACTIVE) PMP10151

Description & Features | Technical Documents | Support & Community | Order Now

View the Important Notice for TI Designs covering authorized use, intellectual property matters and disclaimers.

Description

This reference design provides an adjustable output voltage between 20V and 25V and an input voltage range of 10V to 14V. It also provides the functionality to limit the input current of the converter between 70mA and 135mA. The adjustable values are set by a VID interface which is either discrete or integrated.

Features

- Adjustable output voltage
- Adjustable input current limit

TI's Standard Terms and Conditions for Evaluation Modules apply.

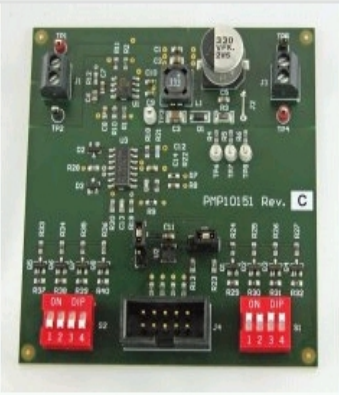

Sepic with Adjustable Output Voltage and Input Current Limit Reference Design

Fully assembled board (shown above) developed for testing and performance validation only, not available for sale.

Schematic/Block Diagram

Quickly understand overall system functionality.

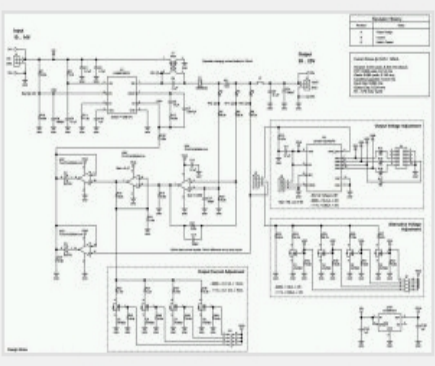

Download Schematic

Test Data

Get results faster with test and simulation data that's been verified.

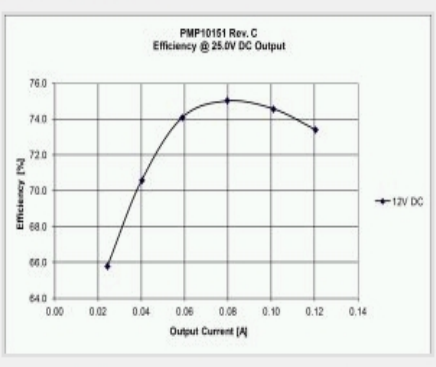

Download Test Data

Design Files

Download ready-to-use system files to speed your design process. Get Viewer.

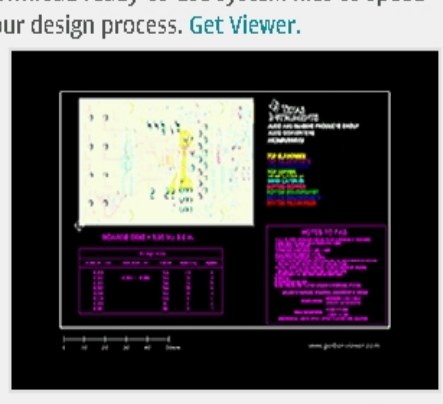

Download Design Files

Bill of Materials (BOM)

Find the complete list of components in this reference design.

Download BOM

Parametrics

	PMP10151
Vin (Min) (V)	10
Vin (Max) (V)	14
Vout (Nom) (V)	25
Iout (Max) (A)	.135
Output Power	3.375
Isolated/Non-Isolated	Non-Isolated
Input Type	DC
Topology	Sepic- Integrated Switch

TI Devices (2)

Order samples, get tools and find more information on the TI products in this reference design.

Part Number	Name	Product Family	Sample & Buy	Design Kits & Evaluation Modules
LM10011	1% Accuracy 4/6-Bit VID Voltage Programmer for Point of Load Regulator w/ Adj Start-Up Current	Power Supply Support	Sample & Buy	View Design Kits & Evaluation Modules
LM5001	3.1-75V Wide Vin, 1A Current Mode Non-Synchronous Switch Mode Regulator	Converter (Integrated Switch)	Sample & Buy	View Design Kits & Evaluation Modules

CAD/CAE symbols

Part #	Package | Pins	CAD File (.bxl)	STEP Model (.stp)
LM10011	WSON (DSC) | 10	Download	Download
LM5001	SOIC (D) | 8	Download	Download
	WSON (NGT) | 8	Download	Download

Texas Instruments and Accelerated Designs Inc. have collaborated together to provide TI customers with schematic symbols and PCB layout footprints for TI products.

Step 1: Download and install the Ultra Librarian software ZIP: 62MB

Step 2: Download the Symbol and Footprint .bxl file.

- read more -

Technical Documents

User guides (1)

Title	Abstract	Type	Size (KB)	Date	Views
PMP10151 Test Results		PDF	809	10 Apr 2015	108

Design files (6)

Title	Abstract	Type	Size (KB)	Date	Views
PMP10151 Gerber		ZIP	41	10 Apr 2015	34
PMP10151 Altium		ZIP	633	10 Apr 2015	73
PMP10151 PCB		PDF	245	10 Apr 2015	49
PMP10151 Assembly Drawing		PDF	217	10 Apr 2015	43
PMP10151 BOM		PDF	17	10 Apr 2015	86
PMP10151 Schematic		PDF	283	10 Apr 2015	390

Applications

- Camera - Front Camera

Support & Community

TI E2E™ community

TI E2E™ Community

As a member of my.TI you can join the TI E2E™ Community where you can ask questions, share ideas and collaborate with fellow engineers and TI experts

Contents are provided "AS IS" by the respective TI and Community contributors and do not constitute TI specifications. See Terms of use.

Engage in the Community

- Amplifiers
- Broadband RF/IF & Digital Radio
- Clocks & Timers
- Data Converters
- DLP® & MEMS
- Interface
- Logic
- Power Management
- Wireless Connectivity

Wikis

Visit the TI Wiki

Other Support

- TI E2E Community
- Contact Technical Support

Your History

Products You Recently Viewed

- PMP10074
- PMP10856
- PMP9367
- PMP10613.1
- PMP10613.2

TI is a global semiconductor design and manufacturing company. Innovate with 100,000+ analog ICs and embedded processors, along with software, tools and the industry's largest sales/support staff.

© Copyright 1995-2015 Texas Instruments Incorporated. All rights reserved.
Trademarks | Privacy policy | Terms of use | Terms of sale