DC-DC POL 12V In Dual Output - 1.2V 5A Reference Design

(ACTIVE) PMP4379

Description & Features | Technical Documents | Support & Community | Order Now

View the Important Notice for TI Designs covering authorized use, intellectual property matters and disclaimers.

Description

The PMP4379 is a POL module reference design suitable for DSP & FPGA applications with a DC input of 4.5V - 15V. Detailed data is provided. The output voltage could be trimmed by resistors over a range from 0.7V to 5V. A typical application is for dual 1.2V/5A.

Features

- Fully tested to comply with the industrial requirement (Including High & Low temperature)
- Single chip for dual independent DC outputs
- Protection includes the Input UVP, output OCP and OTP
- Flexible configuration of output requirements by setting resistors
- Good thermal performance with low component count
- Small dimensions: 22.6mm x 11.6mm x 6.5mm

DC-DC POL 12V In Dual Output - 1.2V 5A Reference Design (top view)

Fully assembled board (shown above) developed for testing and performance validation only, not available for sale.

TI's Standard Terms and Conditions for Evaluation Modules apply.

Schematic/Block Diagram

Quickly understand overall system functionality.

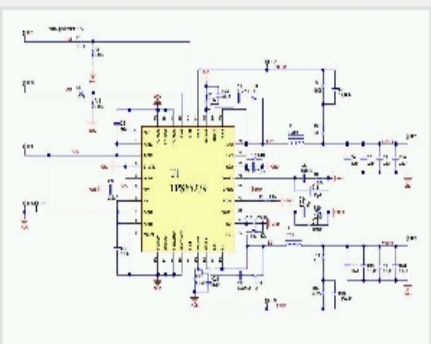

Download Schematic

Test Data

Get results faster with test and simulation data that's been verified.

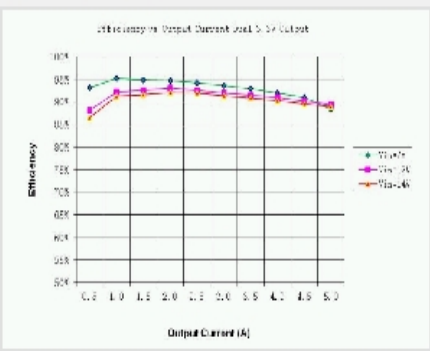

Download Test Data

Design Files

Download ready-to-use system files to speed your design process. Get Viewer.

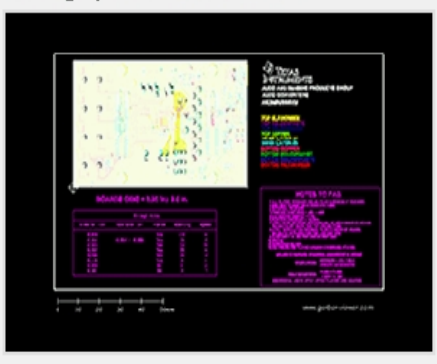

Download Design Files

Bill of Materials (BOM)

Find the complete list of components in this reference design.

Download BOM

Parametrics

	PMP4379
Vin (Min) (V)	4.5
Vin (Max) (V)	14
Vout (Nom) (V)	1.2
Iout (Max) (A)	5
Output Power	6
Isolated/Non-Isolated	Non-Isolated
Input Type	DC
Topology	Buck- Synchronous

TI Devices (1)

Order samples, get tools and find more information on the TI products in this reference design.

Part Number	Name	Product Family	Sample & Buy	Design Kits & Evaluation Modules
TPS65279	4.5-V to 18-V Input, Dual 5-A Synchronous Step-Down Converter	Converter (Integrated Switch)	Sample & Buy	View Design Kits & Evaluation Modules

Technical Documents

User guides (1)

Title	Abstract	Type	Size (KB)	Date	Views
PMP4379 Test Results		PDF	1319	05 Mar 2015	107

Design files (4)

Title	Abstract	Type	Size (KB)	Date	Views
PMP4379 Gerber		ZIP	210	05 Mar 2015	49
PMP4379 PCB		PDF	10339	05 Mar 2015	85
PMP4379 BOM		PDF	28	05 Mar 2015	142
PMP4379 Schematic		PDF	194	05 Mar 2015	191

Support & Community

TI E2E™ community

As a member of my.TI you can join the TI E2E™ Community where you can ask questions, share ideas and collaborate with fellow engineers and TI experts

Contents are provided "AS IS" by the respective TI and Community contributors and do not constitute TI specifications. See Terms of use.

Engage in the Community

- Amplifiers
- Broadband RF/IF & Digital Radio
- Clocks & Timers
- Data Converters
- DLP® & MEMS
- Interface
- Logic
- Power Management
- Wireless Connectivity

Wikis

Visit the TI Wiki

Other Support

- TI E2E Community
- Contact Technical Support

Your History

Products You Recently Viewed

- PMP10896
- PMP10111
- PMP10151
- PMP10074
- PMP10856

TI is a global semiconductor design and manufacturing company. Innovate with 100,000+ analog ICs and embedded processors, along with software, tools and the industry's largest sales/support staff.

© Copyright 1995-2015 Texas Instruments Incorporated. All rights reserved.
Trademarks | Privacy policy | Terms of use | Terms of sale