2W 88-269Vac Input with Dual +3.3V and -3.3V Outputs Reference Design

(ACTIVE) PMP9608

Description & Features | Technical Documents | Support & Community | Order Now

View the Important Notice for TI Designs covering authorized use, intellectual property matters and disclaimers.

Description

This reference design generates an isolated 2W dual output (+3.3V & -3.3V) from AC line 88 - 269VAC. The UCC28910 incorporates a 700V power MOSFET and PSR controller. It saves PCB space and reduces assembly time.

Features

- Dual output
- Small solution size
- Wide input voltage
- Fast turn on time
- Low output ripple voltage

2W 88-269Vac Input with Dual +3.3V and -3.3V Outputs Reference Design

Fully assembled board (shown above) developed for testing and performance validation only, not available for sale.

TI's Standard Terms and Conditions for Evaluation Modules apply.

Schematic/Block Diagram

Quickly understand overall system functionality.

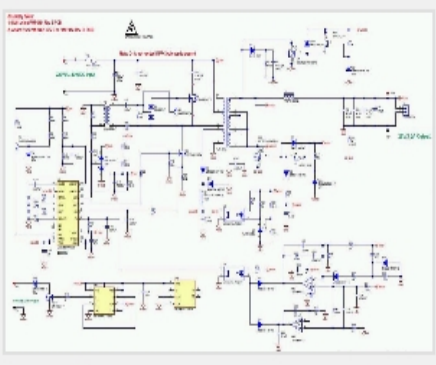

Download Schematic

Test Data

Get results faster with test and simulation data that's been verified.

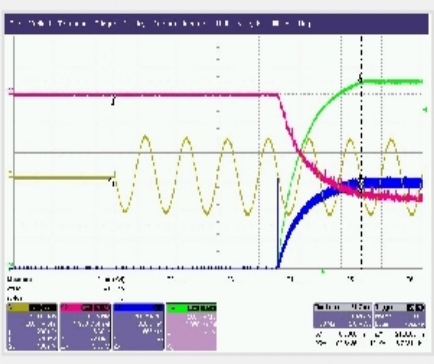

Download Test Data

Design Files

Download ready-to-use system files to speed your design process. Get Viewer.

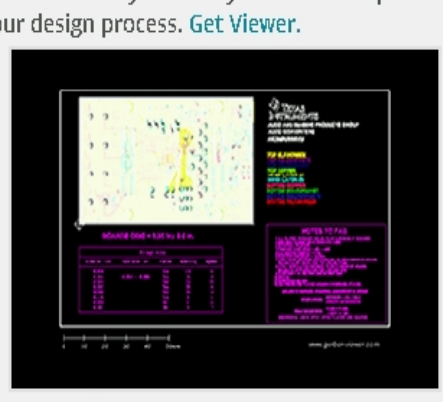

Download Design Files

Bill of Materials (BOM)

Find the complete list of components in this reference design.

Download BOM

Parametrics

	PMP9608
Vin (Min) (V)	88
Vin (Max) (V)	269
Vout (Nom) (V)	3.3
Iout (Max) (A)	.6
Output Power	1.98
Isolated/Non-Isolated	Isolated
Input Type	AC
Topology	Flyback- DCM

TI Devices (1)

Order samples, get tools and find more information on the TI products in this reference design.

Part Number	Name	Product Family	Sample & Buy	Design Kits & Evaluation Modules
UCC28910	700V Flyback Switcher with Constant-Voltage Constant-Current and Primary-side Control	AC/DC and Isolated DC/DC Power Supply	Sample & Buy	View Design Kits & Evaluation Modules

CAD/CAE symbols

Part #	Package | Pins	CAD File (.bxl)	STEP Model (.stp)
UCC28910	SOIC (D) | 7	Download	-

Texas Instruments and Accelerated Designs Inc. have collaborated together to provide TI customers with schematic symbols and PCB layout footprints for TI products.

Step 1: Download and install the Ultra Librarian software ZIP: 62MB

Step 2: Download the Symbol and Footprint .bxl file.

- read more -

Technical Documents

User guides (1)

Title	Abstract	Type	Size (KB)	Date	Views
PMP9608 Test Results		PDF	654	26 Feb 2015	109

Design files (3)

Title	Abstract	Type	Size (KB)	Date	Views
PMP9608 Gerber		ZIP	485	26 Feb 2015	63
PMP9608 BOM		PDF	20	26 Feb 2015	184
PMP9608 Schematic		PDF	97	26 Feb 2015	363

Support & Community

TI E2E™ community

As a member of my.TI you can join the TI E2E™ Community where you can ask questions, share ideas and collaborate with fellow engineers and TI experts

Contents are provided "AS IS" by the respective TI and Community contributors and do not constitute TI specifications. See Terms of use.

Engage in the Community

- Amplifiers
- Broadband RF/IF & Digital Radio
- Clocks & Timers
- Data Converters
- DLP® & MEMS
- Interface
- Logic
- Power Management
- Wireless Connectivity

Wikis

Visit the TI Wiki

Other Support

- TI E2E Community
- Contact Technical Support

Your History

Products You Recently Viewed

- PMP9608.1
- PMP5722
- PMP4379
- PMP10896
- PMP10111

TI is a global semiconductor design and manufacturing company. Innovate with 100,000+ analog ICs and embedded processors, along with software, tools and the industry's largest sales/support staff.

© Copyright 1995-2015 Texas Instruments Incorporated. All rights reserved.
Trademarks | Privacy policy | Terms of use | Terms of sale