48V-60Vdc Input, 12V/150W Active Clamp Forward - Reference Design

TIDesigns

(PREVIEW) PMP9720

Description & Features | Technical Documents | Support & Community | Order Now

View the Important Notice for TI Designs covering authorized use, intellectual property matters and disclaimers.

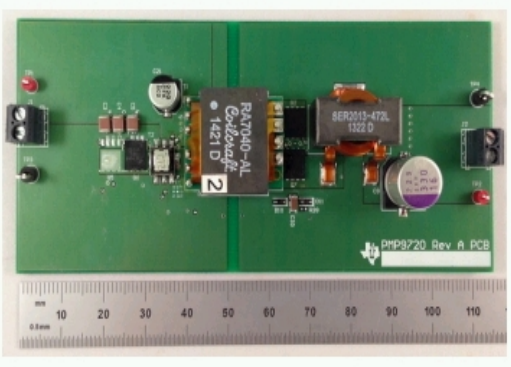

48V-60Vdc Input, 12V/150W Active Clamp Forward - Top

Description

This reference design generates a 12V/13A output from 54V DC input. The UCC2897A controls an active clamp forward converter power stage. The low gate charge and low RDSon of the CSD18532Q5B, implemented as self-driven synchronous rectifiers, allow this design to achieve a max load efficiency over 95%. The compact UCC27511 drivers simplify the gate drive circuitry for the synchronous rectifiers.

Features

- High Efficiency (over 95%)
- Generates regulated 12V bus for telecom or server applications
- Low profile, less than 0.5 inches (12.5mm) max component height
- Self-driven synchronous rectifiers reduce drive complexity

Fully assembled board (shown above) developed for testing and performance validation only, not available for sale.

TI's Standard Terms and Conditions for Evaluation Modules apply.

Schematic/Block Diagram

Quickly understand overall system functionality.

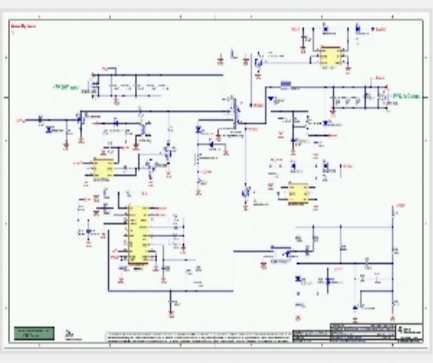

Download Schematic

Test Data

Get results faster with test and simulation data that's been verified.

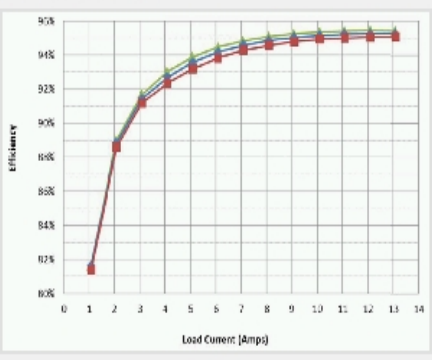

Download Test Data

Design Files

Download ready-to-use system files to speed your design process. Get Viewer.

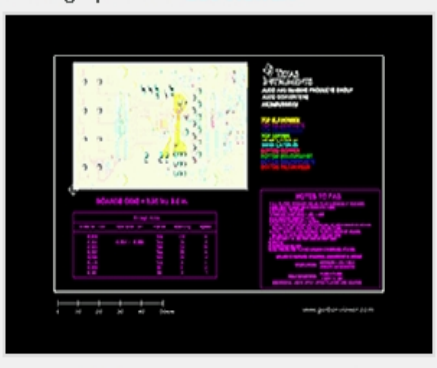

Download Design Files

Bill of Materials (BOM)

Find the complete list of components in this reference design.

Download BOM

Parametrics

	PMP9720
Vin (Min) (V)	47
Vin (Max) (V)	60
Vout (Nom) (V)	12
Iout (Max) (A)	13
Output Power	156
Isolated/Non-Isolated	Isolated
Input Type	DC
Topology	Forward- Active Clamp Forward- Synchronous

TI Devices (3)

Order samples, get tools and find more information on the TI products in this reference design.

Part Number	Name	Product Family	Sample & Buy	Design Kits & Evaluation Modules
CSD18532Q5B	60-V, N-Channel NexFET™ Power MOSFET	Power MOSFET	Sample & Buy	View Design Kits & Evaluation Modules
UCC27511	4A/8A Single Channel High-speed Low-side Gate Driver	AC/DC and Isolated DC/DC Power Supply	Sample & Buy	View Design Kits & Evaluation Modules
UCC2897A	Advanced Current-Mode Active Clamp PWM Controller	AC/DC and Isolated DC/DC Power Supply	Sample & Buy	View Design Kits & Evaluation Modules

CAD/CAE symbols

Part #	Package | Pins	CAD File (.bxl)	STEP Model (.stp)
CSD18532Q5B	VSON-CLIP (DNK)| 8	Download	-
UCC27511	SOT (DBV) | 6	Download	Download
UCC2897A	TSSOP (PW) | 20	Download	Download
	VQFN (RGP) | 20	Download	-

Texas Instruments and Accelerated Designs Inc. have collaborated together to provide TI customers with schematic symbols and PCB layout footprints for TI products.

Step 1: Download and install the Ultra Librarian software ZIP: 62MB

Step 2: Download the Symbol and Footprint .bxl file.

- read more -

Technical Documents

User guides (1)

Title	Abstract	Type	Size (KB)	Date	Views
PMP9720 Test Results		PDF	4103	18 Sep 2014	78

Design files (6)

Title	Abstract	Type	Size (KB)	Date	Views
PMP9720 Gerber		ZIP	227	18 Sep 2014	47
PMP9720 CAD Files		ZIP	706	18 Sep 2014	70
PMP9720 PCB		PDF	399	18 Sep 2014	77
PMP9720 Assembly Drawing		PDF	85	18 Sep 2014	53
PMP9720 BOM		PDF	84	18 Sep 2014	98
PMP9720 Schematic		PDF	232	18 Sep 2014	172

Support & Community

TI E2E™ community

TI E2E™ Community

As a member of my.TI you can join the TI E2E™ Community where you can ask questions, share ideas and collaborate with fellow engineers and TI experts

Contents are provided "AS IS" by the respective TI and Community contributors and do not constitute TI specifications. See Terms of use.

Engage in the Community

- Amplifiers
- Broadband RF/IF & Digital Radio
- Clocks & Timers
- Data Converters
- DLP® & MEMS
- Interface
- Logic
- Power Management
- Wireless Connectivity

Wikis

Visit the TI Wiki

Other Support

- TI E2E Community
- Contact Technical Support

Your History

Products You Recently Viewed

- PMP7033
- PMP8965
- PMP7895
- PMP4442-1
- PMP4442-2

TI is a global semiconductor design and manufacturing company. Innovate with 100,000+ analog ICs and embedded processors, along with software, tools and the industry's largest sales/support staff.

© Copyright 1995-2015 Texas Instruments Incorporated. All rights reserved.
Trademarks | Privacy policy | Terms of use | Terms of sale